SECTION 07 54 00 – SINGLE PLY ROOFING

PART I - GENERAL

1.01 Description

A. This guide specification describes typical application methods for a mechanically fastened; 45-mil TPA (Tri-Polymer Alloy) single ply roof system.

B. Related Work

1. Sheet Metal
2. Sealants and Caulking

1.02 Scope of Work

A. The roofing contractor shall furnish and install specified roofing and related components to designated roof areas at DJUSD Capital Operations Office, North Davis Elementary School, Cesar Chavez Elementary School, Da Vinci High School, Davis Senior High School, and Emerson Junior High School.

B. Capital Operations Office Roof Work includes:
1. Remove existing single ply roof system, leaving coverboard in place.
2. Remove and set aside coping cap for re-use.
3. Install mechanically fastened 45-Mil TPA roof system and associated flashings and components of the single ply roof system.
4. Extend base flashing up and over parapet walls and reinstall the coping cap.
5. Include 120 lineal feet (2 rolls) of walkway material to provide path to HVAC units and pad at service side of unit.
6. Replace all wood blocks with new Durablok or similar rubber blocks.

C. North Davis Elementary School - E & F Wing Portable Classrooms Roof Work Includes:
1. Remove existing standing seam metal roof system.
2. Mechanically fasten one layer of ¼” coverboard.
3. Install mechanically fastened 45-Mil TPA roof system and associated flashings and components of the single ply roof system.
4. Install new seamless gutters and reuse existing downspouts.

D. Cesar Chavez Elementary School - Old MPR Roof Work Includes:
1. Remove existing single ply roof system, leaving coverboard in place.
2. Install mechanically fastened 45-Mil TPA roof system and associated flashings and components of the single ply roof system.
3. Replace all wood blocks with new Durablok or similar rubber blocks.

E. Da Vinci HS – K1 & K2 Portable Clasrooms Roof Work Includes:
1. Remove existing standing seam metal roof system.
2. Mechanically fasten one layer of ¼” coverboard.

3. Install mechanically fastened 45-Mil TPA roof system and associated flashings and components of the single ply roof system.
4. Install new seamless gutters and reuse existing downspouts.

F. Davis Senior High School – N1-N4 & N1A Roof Work Includes:
1. Removal of existing shingle roof system.
2. Installation of HT Self-Adhesive waterproofing membrane.
3. Installation of new composition shingle roof system and flashings.
4. Install new seamless gutters and reuse existing downspouts.

G. Emerson Junior HS – PE Storage Roof Work Includes:
1. Remove existing standing seam metal roof system.
2. Install ½" plywood over entire structure.
2. Mechanically fasten one layer of ¼" coverboard.
3. Install mechanically fastened 45-Mil TPA roof system and associated flashings and components of the single ply roof system.

E. The roof shall be left watertight with no exposed insulation at the end of each work day.

1.03 Performance Requirements

A. General: Provide installed roofing membrane and base flashings that remain watertight; do not permit the passage of water; and resist specified uplift pressures, thermally induced movement, and exposure to weather without failure.

B. Material Compatibility: Provide roofing materials that are compatible with one another under conditions of service and application required, as demonstrated by roofing membrane manufacturer based on testing and field experience.

C. Flashings: Comply with requirements of Division 7 Section "Sheet Metal Flashing and Trim." Provide base flashings, perimeter flashings, detail flashings and component materials that comply with requirements and recommendations of the following:
1. FMG 1-49 Loss Prevention Data Sheet for Perimeter Flashings.
2. FMG 1-29 Loss Prevention Data Sheet for Above Deck Roof Components.
3. NRCA Roofing and Waterproofing Manual (Fifth Edition) for construction details, as modified by FMG requirements indicated.
4. SMACNA Architectural Sheet Metal Manual (Fifth Edition) for construction details.

1.04 Quality Assurance

A. Qualifications:
1. Material Qualifications:
a. Roofing Material manufacturer shall:
1) Be nationally recognized in roofing and waterproofing industry for at least ten (10) years.
2) Single Ply Membrane must meet or exceed the California Energy Commission's Title 24 requirements for reflectance and emissivity adopted for 2005.
3) Provide local Field Representative to make periodic site visits, report work quality and job progress.
4) Provide list of at least three (3) projects available for inspection employing same system(s) within the last three years, within the same climate zone and 50 mile distance of project building(s).

5) Be approved by Owner.
6) The presence and activity of the manufacturer's representative and/or Owner's representative shall in no way relieve the roofing contractor of his/her contractual liabilities/responsibilities.
7) Provide to the Owner names of at least three (3) qualified roofing applicators/installers.
8) Provide Warranty / Technical inspector available for full or part time inspection as required by Owner.

2. Installer Qualifications:
   a. The roofing contractor shall be experienced and approved in writing by the roofing material manufacturer to install manufacturer's products and systems in accordance with manufacturer's warranty requirements.
   b. The Roofing Contractor shall:
      1) Be acceptable to the Owner and Roofing Material Manufacturer.
      2) Be responsible for obtaining all data required from roofing material manufacturer.
      3) Have not been in Chapter 7 during the last ten (10) years.

B. Pre-installation Conference: Conduct conference at Project site(s). Review methods and procedures related to roofing system installation including, but not limited to, the following:
   1. Meet with Owner Representative, Roof System Manufacturer's Representative, Installer, and installers whose work inter-faces with or affects roofing including installers of roof accessories and roof-mounted equipment.
   2. Review methods and procedures related to roofing installation, including manufacturer's written instructions.
   3. Review and finalize construction schedule and verify availability of materials, Installer's personnel, equipment, and facilities needed to make progress and avoid delays.
   4. Examine deck substrate conditions and finishes for compliance with requirements, including flatness and fastening.
   5. Review structural loading limitations of roof deck during and after roofing.
   6. Review base flashings, special roofing details, roof drainage, roof penetrations, equipment curbs, and condition of other construction that will affect roofing system.
   7. Review governing regulations and requirements for insurance and certificates if applicable.
   8. Review temporary protection requirements for roofing system during and after installation.
   9. Review roof observation and repair procedures after roofing installation.

C. Source Limitations: Obtain components for membrane roofing system from or approved by roofing membrane manufacturer.

D. Upon completion of the installation, an authorized manufacturers' Technical Service Inspector shall inspect the completed roof to verify that the visible elements of the installation have been installed in accordance with the Owner's and the manufacturers' specifications, detail drawings, and approved changes.

1.05 Submittals

A. PRODUCT DATA: None required for specified products.

B. Any material submitted as an equal to the specified material must provide the following to Davis Joint Unified School District 5 days prior to bid opening. If the proposed substitute is acceptable to the District, an addendum will be issued to all project bidders:

1. Written application with why it should be considered.
2. Manufacturer's spec data sheets comparing substitute's physical and performance attributes to those specified.
3. Smallest standard package of manufacturer's single ply, adhesives, etc…
4. At least three (3) references of similar projects for public entities performed within the last two (2) years.
5. Copy of service warranty detailing annual preventative maintenance plan, 24-hour (800) number leak response service, emergency repairs, and Internet based on-line service for reporting inspections and roof conditions.
6. Copy of 20-year Warranty.
7. Name and office location of manufacturer employed local field representative.
8. Name and office location of manufacturer employed warranty and technical inspector for job-site and final inspections.

1.06 Product Delivery, Storage and Handling

A. Materials shall be delivered in the original, unopened containers.

B. All products shall be delivered to the job site with the manufacturer's labels on each roll or container. When required, the label shall also indicate the specified code/insurance approvals.

C. All materials shall be stored flat, elevated from the roof or deck, protected with waterproof covers as necessary to keep the materials dry. The plastic wrap on the TPA rolls is not intended as a waterproof cover.

D. All materials shall be protected from damage.

E. Materials damaged in handling or storage shall not be used without authorization by Tremco. Unsalvageable materials shall be replaced at the contractor's expense.

F. Material Safety Data Sheets, available from Tremco, shall be reviewed.

1.07 Job Conditions

A. TPA roofing systems shall not be installed during periods of precipitation. TPA membrane may be installed under certain adverse weather conditions (temperature and humidity), contact Tremco for precautions that should be followed.

B Only as much of the new roofing as can be made weathertight each day shall be completed in accordance with the Tremco specifications, including all field flashings.

C. All work shall be scheduled and executed without exposing the interior building area(s) to the effect of inclement weather. The existing building and its content shall be protected against all risks associated with installation of the roof system.

D. All surface areas to receive new insulation, membrane or flashings, shall be thoroughly dry. Should surface moisture occur, the contractor shall provide necessary materials and equipment to dry the surface area affected prior to installation.

E All areas contaminated by dirt, debris, and dust shall be cleaned from surfaces by vacuuming, sweeping or power blowing.

F. When storing material on the roof and during application, the roofing contractor shall ensure that overloading of the deck and structure does not occur.

G. Any deteriorated deck or flashing substrate which is discovered shall be promptly reported to the Owner or designated representative.

H. The roofing contractor shall investigate all existing roof drain lines. Non-functioning drains shall be reported to the Owner prior to job start. It is the responsibility of the roofing contractor to insure adequate connection of the drain to the drain lines.

I. The roofing contractor shall investigate the structural deck on the building to determine the type and length of fastener required. Gypsum, concrete and cementious wood fiber decks require fastener pull-out tests, contact Tremco for additional information.

J. If waste products, petroleum, grease, oil, solvents, mineral oil, and other contaminants come into contact with the TPA roofing membrane, contact Tremco for precautions and cleaning procedures.

K. Site clean-up, including both interior and exterior building areas that have been affected by the roof installation, shall be completed to the Owner's satisfaction. All landscaped areas affected shall be raked clean and seeded, as required.

L. All roofing, insulation flashings and metal work removed during construction shall be immediately removed from the site to a regulated legal dumping area authorized to receive such materials.

1.08 Warranty / Guarantee

A. Guarantee:

1. Upon project completion and Owner acceptance, effective upon complete payment, Contractor shall issue Owner a guarantee against defective workmanship and materials for a period of two (2) years.

B. Warranty and Service Agreement:

1. Upon project completion, Tremco acceptance, and once complete payment has been received by both Contractor and Tremco, Tremco shall deliver to the Owner a twenty (20) year Tremco Roofing System Quality Assurance Warranty and Service Agreement. Tremco will, during the second, fifth, tenth, and fifteenth year of this warranty service agreement, provide the following for the Tremco Roof System:
    a. Inspection by a Tremco Technical Service Representative and delivery of a written inspection report documenting roof conditions.
    b. Preventive maintenance and necessary repairs, including splits, tears, or breaks in the roof membrane system and flashings which threaten the integrity of the roof system and are not exempt due to neglect, negligence, vandalism or some other exclusion.
    c. General rooftop housekeeping and cleanup generally including the removal of debris.

1.09 Bidding Requirements

A. Pre-bid conference: A mandatory pre-bid conference shall be held with Owner and all parties and trades involved to discuss all aspects of the project. The contractor's field representative and/or foreman for the project shall be in attendance.

B. All bidders shall visit the site and carefully examine the areas in question as to conditions that may affect the proper execution of the work. All dimensions and quantities shall be determined or verified by the contractor. No claims for extra costs shall be allowed for lack of full knowledge of the existing conditions.

PART II - PRODUCTS

2.01 General

A. All components of the Tremco TPA Single Ply System shall be manufactured, supplied, or accepted in writing by Tremco or Owner approved equal manufacturer.

2.02 Mechanically Fastened Tri-Polymer Alloy Membrane

A. The membrane shall be Tremco 45 mil TPA, a tri-polymer alloy, polyester reinforced roofing system as supplied by Tremco, Inc. or Owner approved equal. The sheet shall conform to the properties listed below. NOTE: The physical properties listed below are typical values.

1. Color: White (top)/Gray (bottom)
2. Roll Size: 78" wide x 108' long
3. Weight: 4.5 oz. ft^2 (nominal)
4. Thickness ASTM D-751: 60 mil (nominal)
5. Breaking Strength ASTM D-751: 350 lbs x 325 lbs
6. Seam Strength ASTM D-638: 90%
7. Elongation @ Break ASTM D-751: 40% X 30%
8. Heat Aging ASTM D-3045: 80% x 80%
9. Tear Strength ASTM D-751: 100 lbs x 100 lbs
10. Low Temperature Bend ASTM D-2136: Pass (-40 F)
11. Permeance ASTM E-96: 0.003 Perms
12. Hydrostatic Resistance ASTM D-751: 400 psi
16. Ozone Resistance ASTM D-1149: PASS – No cracks after 168 hours exposure at 100 degrees F.

2.03 Related Materials

A. Flashings

1. Tremco TPA Membrane Flashing: TPA membrane.

2. TPA Coated Metal: .020@ thick membrane laminated to 24 gauge G-90 galvanized steel with acrylic backwash coating.
3. Tremco TPA Prefabricated Flashing: pipe boots, inside corners, outside corners.

B. Flashing Adhesive: Tremco TPA LV Bonding Adhesive or equal.

C. Sealants: Tremco Polyurethane Sealants or equal.

D. Seaming Procedure: Hot air welding, contact Tremco for acceptable equipment and methods.

E. Mechanical Termination: Approved plates and screws or TPA coated metal.

F. Insulation:
1. Expanded Polystyrene for tapered insulation.
2. ¼" Gysum Coverboard for top layer. Dens-Deck, Securock, Dexcell, or equal.

G. Fasteners: Factory coated steel fasteners meeting corrosion resistance provisions in FMG 4470, designed for fastening membrane to substrate, and acceptable to roofing material manufacturer.

H. Membrane Plates: Tremco or equal 2 3/8" round, Barbed metal plates.

I. Insulation Plates: Tremco or equal 3" diameter, galvanized metal plates.

PART III - EXECUTION

3.01 Pre-Job

A. The Primary contractor, the Owner or Owner's representative shall conduct a pre-roofing conference before any work begins, so all parties involved in the installation of the roofing system construction, or who may work on or through the roofing system, understand their obligations with respect to the roofing membrane.

3.02 Substrate Inspection

A. A proper substrate shall be provided to receive the mechanically fastened TPA roofing system. Contact Tremco for acceptable substrates. The roofing contractor shall notify the Owner and Architect of any defects in the substrate. Work shall not proceed until the substrate has been repaired or replaced.

B. Remove all loose debris from the surface.

C. The roof surface shall be free of standing water, ice, or snow.

3.03 Insulation

A. Insulation boards shall be secured to the roof deck using Tremco galvanized metal plates and #12 coated screws. Each board shall be fastened with the number of fasteners and with the pattern

required by the insulation manufacturer, building insurance codes, or Tremco requirements, whichever is more stringent.

1. Tremco requires a minimum of 8 fasteners per 4’ X 8’ board.

B. Insulation will not be left exposed at the end of the day.

3.04 Fasteners

A. Use only Tremco fasteners or a substitute approved by the Owner.

B. Fasteners shall be driven perpendicular to the work surface.

C. The following guidelines provide the appropriate uses for approved fasteners:

1. Fasteners (#14 coated screw): Steel decks 24 gauge, or heavier, wood 15/32” minimum.

2. For all other deck types not included in this specification, contact Tremco.

D. Fasteners that are improperly installed shall be removed or corrected. Improper application may be characterized as:

1. Overdriven: Fastener is driven to the point that it is causing the stress distribution plate to become concave or has stripped the deck and is no longer engaged.
2. Underdriven: Fastener head is not properly seated on the metal stress plate or is not snapped into the locking position when using the locking plate.
3. Snapped: Fastener breaks under the driving load.
4. Bent: Fastener is bent to the point that it adversely affects the installation.
5. Not Engaged: Fastener is improperly located or of insufficient length.

3.05 TPA Coated Metal Flashings

A. Fabricate and install Tremco TPA coated metal flashing to comply with details and project drawings. Follow recommendations of SMACNA Sheet Metal Manuals for fabrication.

B. All gravel stops and drip edges shall be installed using a continuous 22 gauge hook strip fastened 12” o.c.

C. Fasten Tremco TPA coated metal flashings 3” o.c. to treated wood nailers using galvanized annular ring nails.

D. Metal shall be installed to provide adequate resistance to bending and to allow for normal thermal expansion and contraction. Allow for minimum ¼” space between metal joints.

E. Install adjacent pieces of coated metal flashing with ¼” gap. Apply a 2” wide continuous strip of duct tape over the gap to act as a bond breaker. Hot air weld a 6” strip of TPA membrane, over the duct tape, to each piece of flashing to form a watertight splice.

F. Fasten the top of Tremco TPA coated metal base flashing 8” o.c. using fasteners appropriate for the underlying substrate.

3.06 Membrane Installation

A. Placement:
   1. The Tremco TPA membrane shall be mechanically fastened to the structural deck with #14 Fasteners.
   2. The perimeters and corners may require additional design consideration to develop the necessary resistance for wind conditions. Contact Tremco for additional information if the building is located where winds may exceed standard warranty conditions or special code provisions are required.
   3. The membrane shall be cut to fit neatly around all penetrations and roof projections.
   4. The roofing membrane shall be unrolled and positioned with a minimum 4 ½” overlap. Laps shall be shingled with, or run parallel to, the slope of the roof.
   5. Install two perimeter sheets prior to installation of the field sheets.

B. Attachment:
   1. The TPA membrane is secured using Tremco plates and #14 fasteners.
   2. The spacing of the fasteners used to secure the TPA membrane sheets, prior to welding the seams, is 12” in the field and 6” at the perimeter.
   3. Secure the membrane with fasteners and plates around curbs and other penetrations with the same fastener spacing used to secure the perimeter sheets.
   4. Position all perimeter sheets (39" wide) parallel to the edges of the area to be roofed.
   5. Position and secure the edge of each field sheet prior to welding the adjacent sheet to it.
   6. Secure the membrane at all angle changes in the substrate using the same spacing used for the perimeter sheets. This procedure is required regardless of the cause of the angle change.

C. Seaming:
   1. The overlapping sheets shall be welded using hot air welding equipment. The areas must be dry and must be clean. The contractor must ensure that dirt or debris does not interfere with the seaming process.
   2. The equipment settings and alignment adjustments must be checked continuously during each day to ensure complete fusion within the welded area and a smooth, wrinkle-free seam.
   3. Welds using the automatic welder shall be a minimum of 1 1/2" wide.
   4. All hand welds shall be a minimum of 2" wide.
   5. Membrane to TPA metal seams can be welded using an automatic welder or hand held equipment. Minimum seam widths as outlined above must be followed. Fasteners that secure the coated metal flashing shall not be located within the seam. Provide sufficient flange width (min. 5.0") on all flashings to allow for this requirement. Automatic welder settings will differ from membrane to membrane settings when welding membrane to coated metal.
   6. The seams shall be checked for continuity and integrity. All imperfections must be corrected.

D. Membrane Termination and Securement:
   1. The TPA membrane shall be secured at all terminations at the perimeter of each roof level, roof section, curb flashing, skylight, expansion joint, rising wall, penthouse.
   2. Secure membrane at all angle changes in the deck (changes in roof plane) or insulation taper: inside angles more than 1" per foot from the plane of the roof, ridge angles that exceed 1" per foot total angle change.
   3. Securement shall be achieved using TPA coated metal flashing, adequately fastened to treated wood nailers, or Tremco fasteners (and plates) spaced according to deck type.

4. All terminations and fasteners shall be sealed within a lap or covered with a strip of TPA membrane, its perimeter continuously welded to the field sheet.

3.07 Membrane Flashing

A. All flashings shall be installed as shown on the detail drawings or the manufacturer's standard details. All TPA membrane shall be installed concurrently with the roof membrane as the project progresses. No temporary flashings shall be allowed without prior written approval of the authorized Tremco agent. If any water is allowed to enter under the new roofing due to incomplete flashings, the affected area shall be removed and replaced at contractor's expense.

B. Flashings shall not be applied over existing thru-wall flashings or weep holes. All flashings shall extend a minimum of 8-inches above roof level unless previously accepted by a Owner representative and an authorized Tremco agent.

C. All TPA membrane base flashings shall be fully-adhered to a dry, smooth solvent-resistant and compatible substrate using Tremco TPA LV Bonding Adhesive.
   1. When the surface is dry, TPA membrane flashings shall be cut to proper width and length. Flashing membrane shall be rolled carefully onto the previously prepared substrate taking care to avoid wrinkles.
   2. No adhesive shall be applied to lap (seam) areas that are to be welded to flashings or adjacent membrane sheets by means of hot-air welding procedures.
   3. Care should be taken to ensure that the flashing does not bridge where there is a change of direction.

D. The top of the installed flashing shall be fastened under metal counterflashing, coping cap, or through metal reglet. The maximum distance between fasteners for TPA flashings shall be 8" through flat bar or through metal reglet.

3.08 Roof Penetrations

A. All penetrations (pipes, supports, soil stacks, curbs, etc.) Passing through the roofing membrane shall be flashed in accordance with Tremco details.

B. The flashing seal shall be made directly to the penetration passing through the roof system unless the surface temperature of the penetration exceeds 140 F; surfaces with temperatures that exceed 140 F must have the flashing insulated from the heat source. Contact Tremco for assistance.

C. Existing flashing shall be removed before new flashings are installed during retrofit projects.

D. Use premolded corners to complete flashings of curbs, parapets, pitch pockets and other vertical surfaces.

E. Use Tremco premolded boots to flash circular penetrations 1" to 8" diameter; boots must be pulled over the top of the penetration, do not split the boot.

F. All others shall be field fabricated using TPA membrane or TPA coated metal.

G. Pipe Clusters and Unusual Shapes:

1. Clusters of pipes and other penetrations which cannot be sealed with TPA membrane or prefabricated flashings shall be sealed by surrounding them with sealant within a pitch pocket.
2. Pitch pockets shall be fabricated from coated metal, installed and flashed into the membrane, filled with non-shrink grout to within 2" of the top of the flashing, and topped with vertical grade sealant, sloped to shed water as shown in the detail drawings. Allow grout to dry before applying sealant.
3. Do not use pitch pockets unless absolutely necessary. Only use pre-molded flashings or field fabricated flashings using membrane or coated metal are acceptable.

3.09 Water Cut-Offs

A. Measures shall be taken to ensure that water does not flow beneath the completed sections of the new TPA roofing system. Water cut-offs shall be provided on a daily basis and at the onset of inclement weather. Water cut-offs shall be removed prior to the resumption of work. The integrity of the water cut-off is the sole responsibility of the roofing contractor. Any membrane contaminated by cut-off materials shall be removed before installation of the system continues.

3.10 Membrane Repair

A. Correction of damage to the membrane may be accomplished by hot-air welding a membrane section over the affected area.

B. If the defect is not smooth, cut out and remove enough material to provide an even surface. If any mechanical fasteners are encountered, the repair should include provisions to fasten the repair materials.

C. Repair materials shall overlap the field sheet a minimum of 3" to provide adequate room for a proper weld. Hand welds shall be a minimum of 2"; machine welds shall be a minimum of 1 ½”.

D. Cut all corners of repair materials round.

3.11 Cleaning

A. Keep premises free from accumulation of waste and debris. At the completion of the work and as necessary during the progress of the work, remove from the premises surplus materials, waste, and debris.

B. Upon completion, thoroughly clean surfaces in a manner that will not affect the finish appearance or weather tightness.

END OF SECTION

Installation Details

NON-LIFTABLE

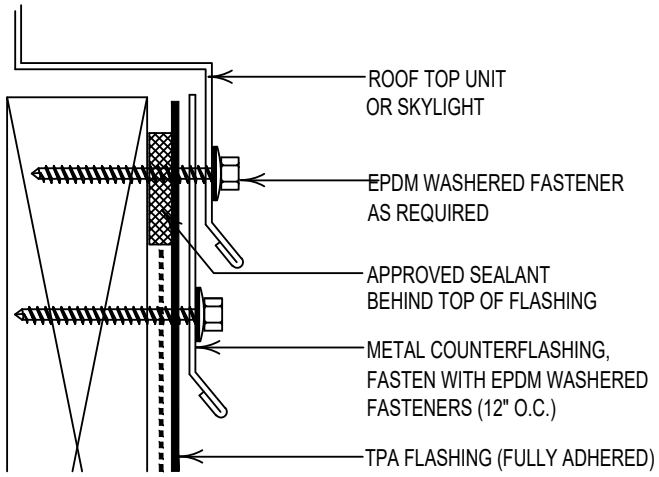

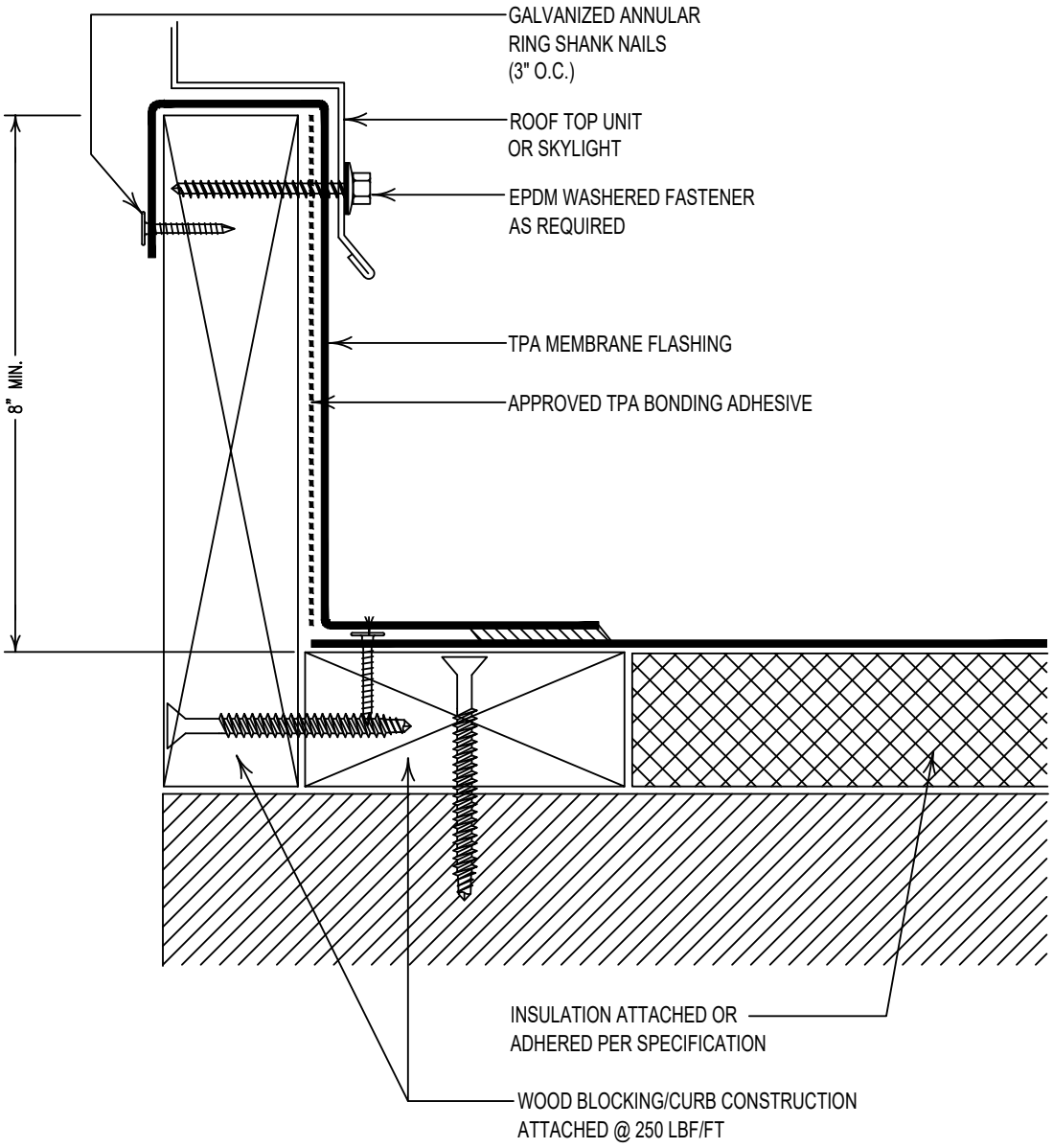

TREMCO TPA
TYPICAL WOOD CURB OR SKYLIGHT

CUSTOM N.T.S.

TREMCO™
Roofing & Building Maintenance

© 2020 TREMCO

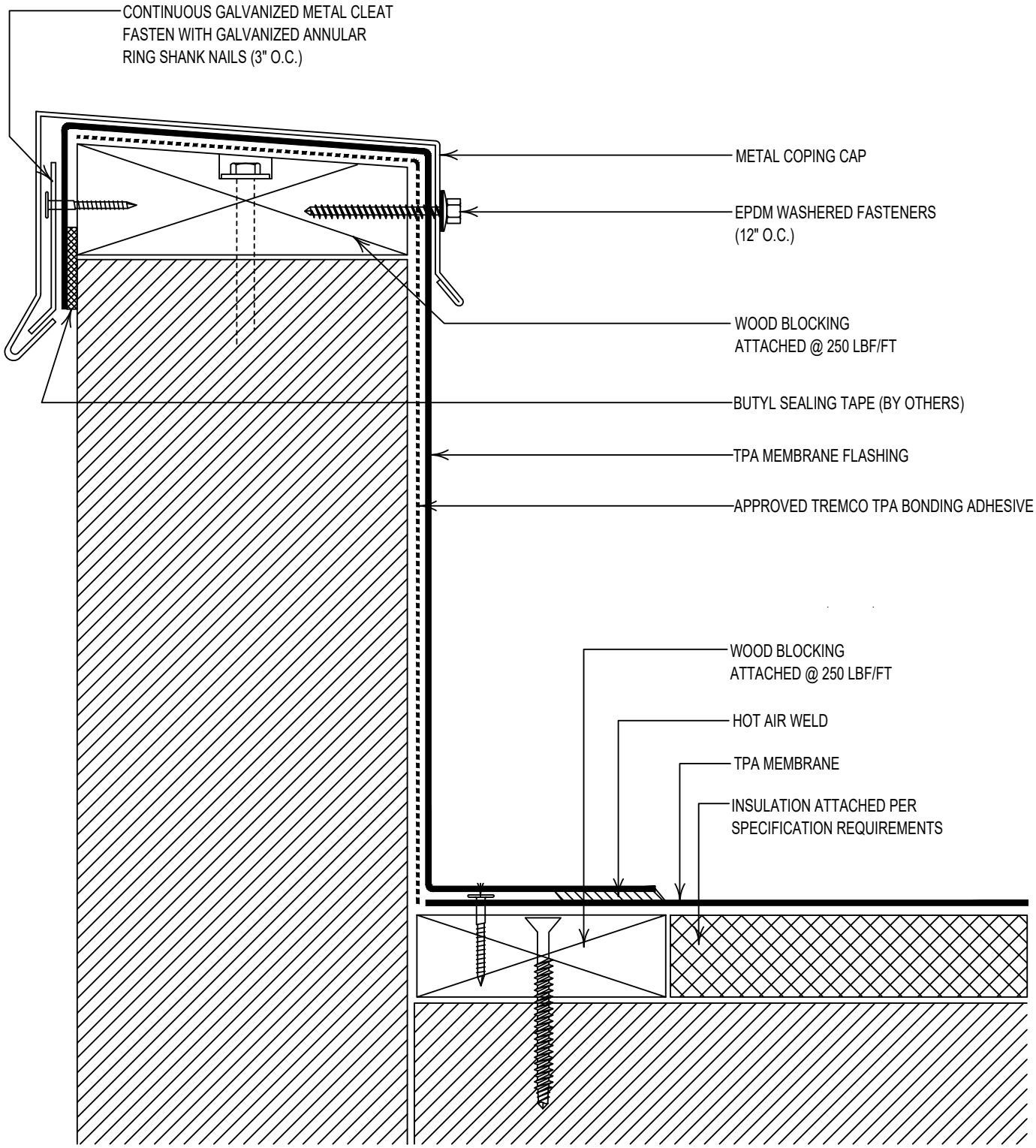

TREMCO TPA
WALL FLASHING
WITH METAL CAP FLASHING

CUSTOM N.T.S.

TREMCO™
Roofing & Building Maintenance

© 2020 TREMCO

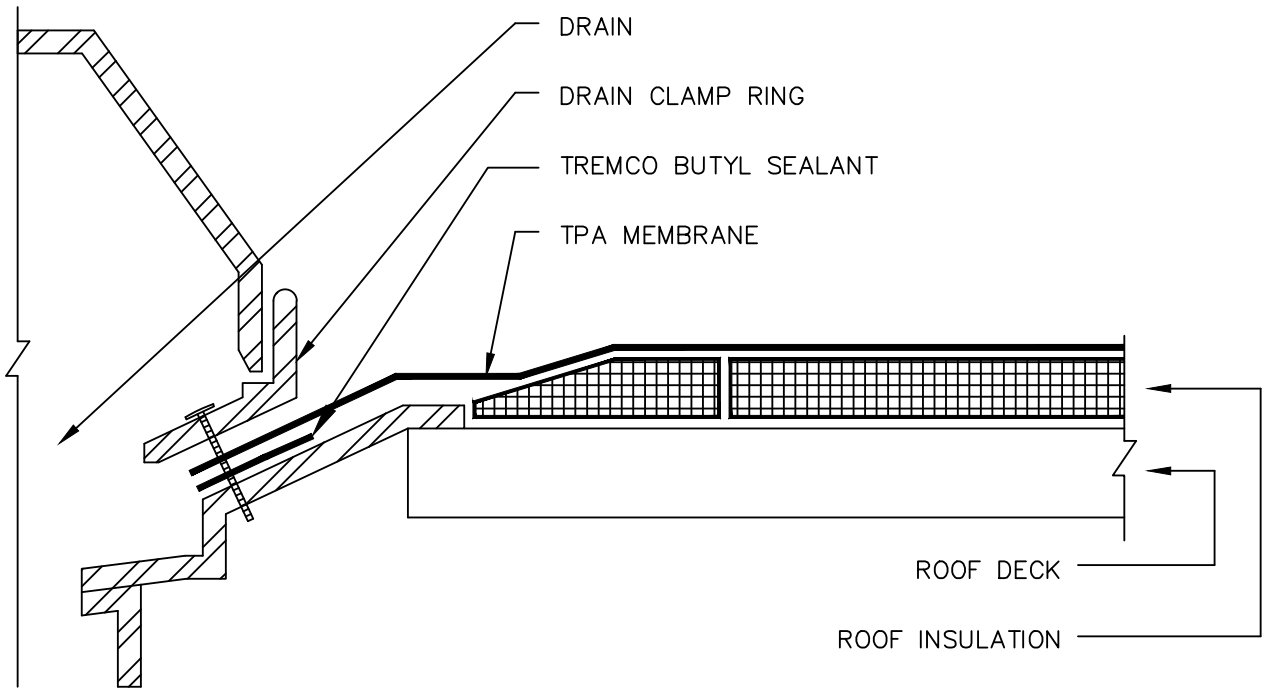

NOTES:

1. A FIELD WELD MUST NOT PASS UNDER THE CLAMPING RING
2. MEMBRANE MUST EXTEND MINIMUM 1" BEYOND THE BOLT HOLES
3. THE CLAMPING RING BOLT MUST PENETRATE THE MEMBRANE

TREMCO®	SHEET TITLE: DRAIN DETAIL	SCALE: NTS DRAWING No.: TPA–17

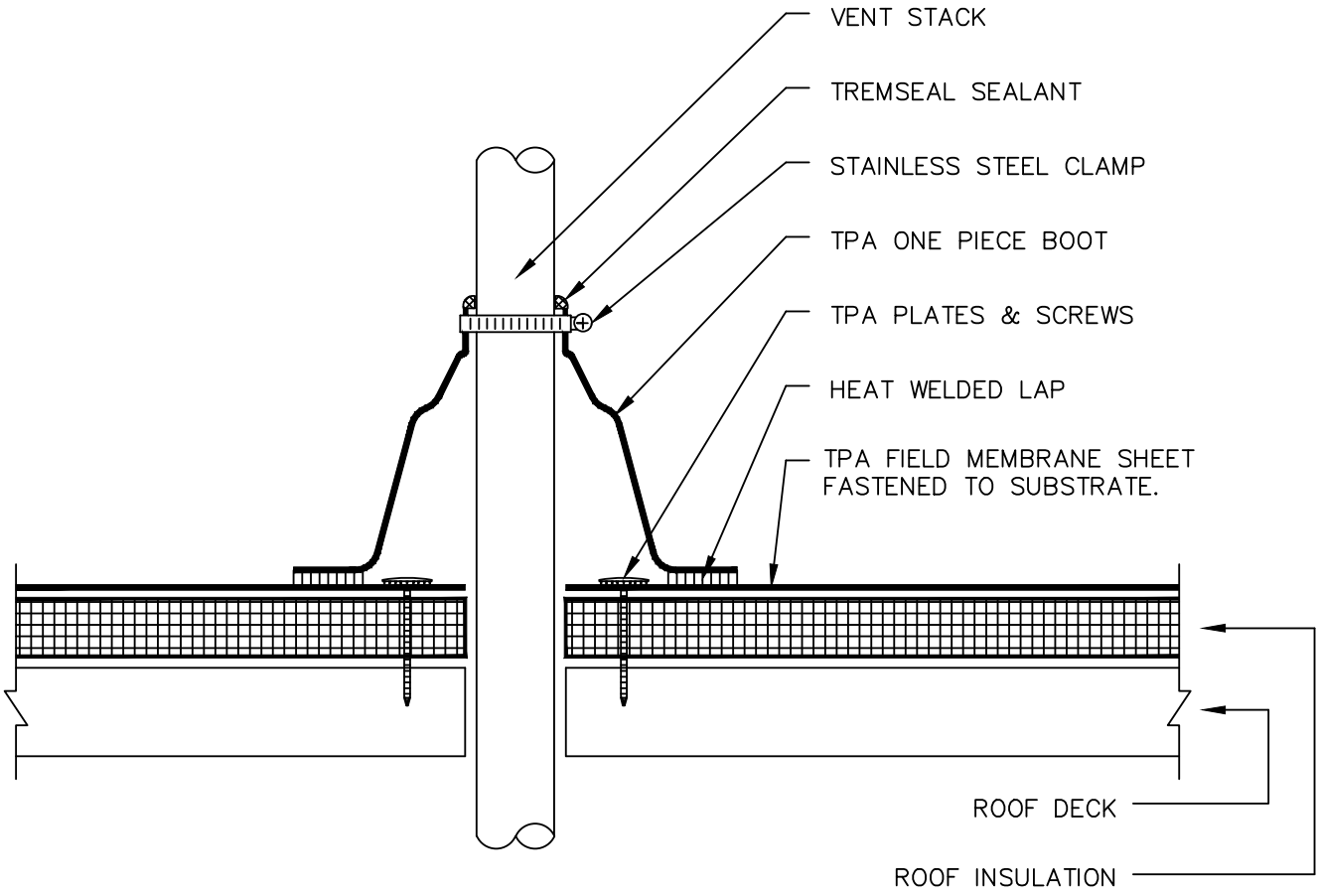

NOTES:

1. DO NOT CUT PREFABRICATED BOOT. IT MUST BE PULLED OVER VENT PIPE.

2. PREFABRICATED BOOTS ARE AVAILABLE IN SMALL (1" TO 4" DIAMETER), AND LARGE SIZES (4" TO 8" DIAMETER)

TREMCO®	SHEET TITLE: PREFABRICATED VENT PIPE FLASHING	SCALE: NTS DRAWING No.: TPA–26

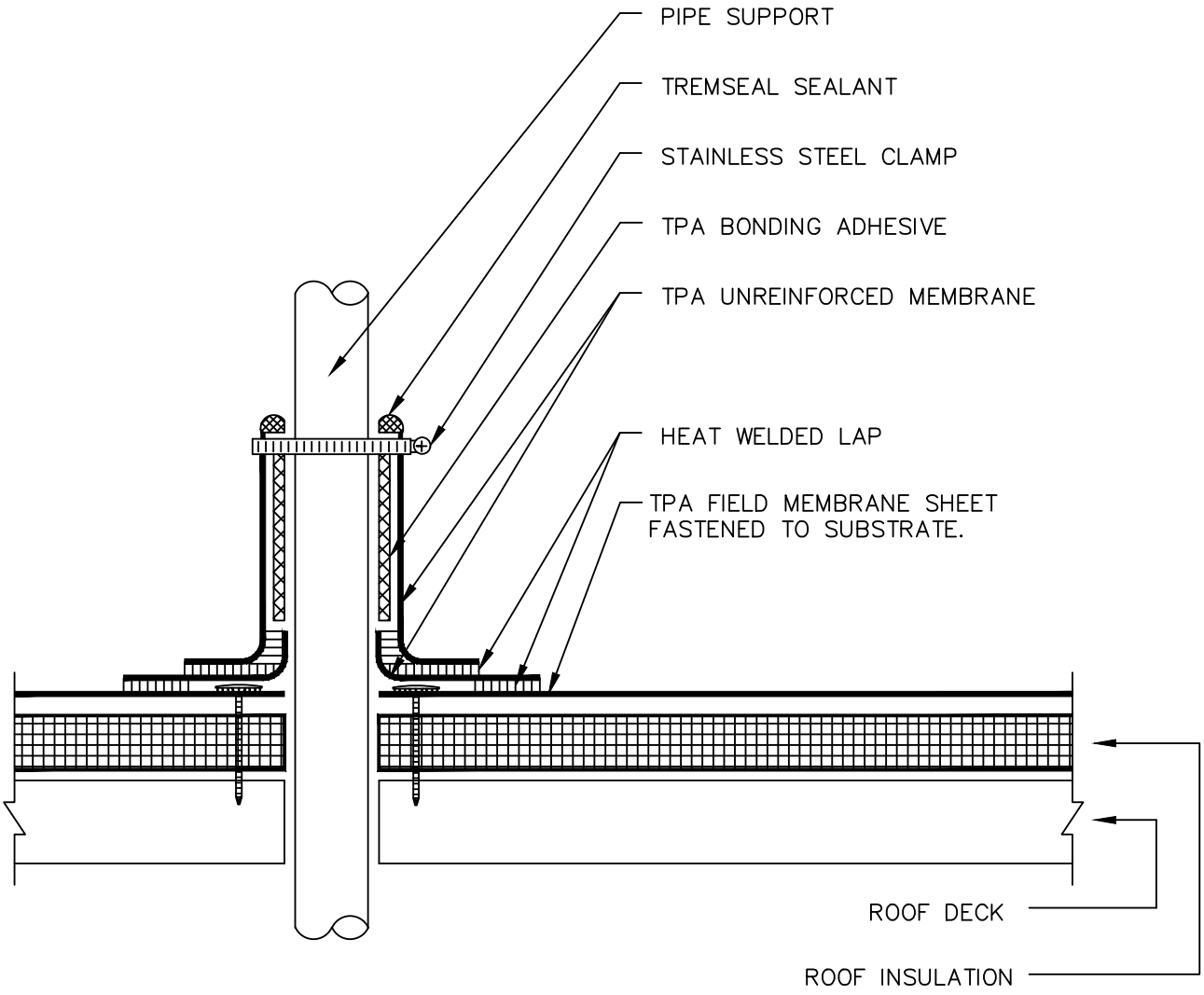

TREMCO®	SHEET TITLE: TWO–PIECE PIPE FLASHING	SCALE: NTS DRAWING No.: TPA–27

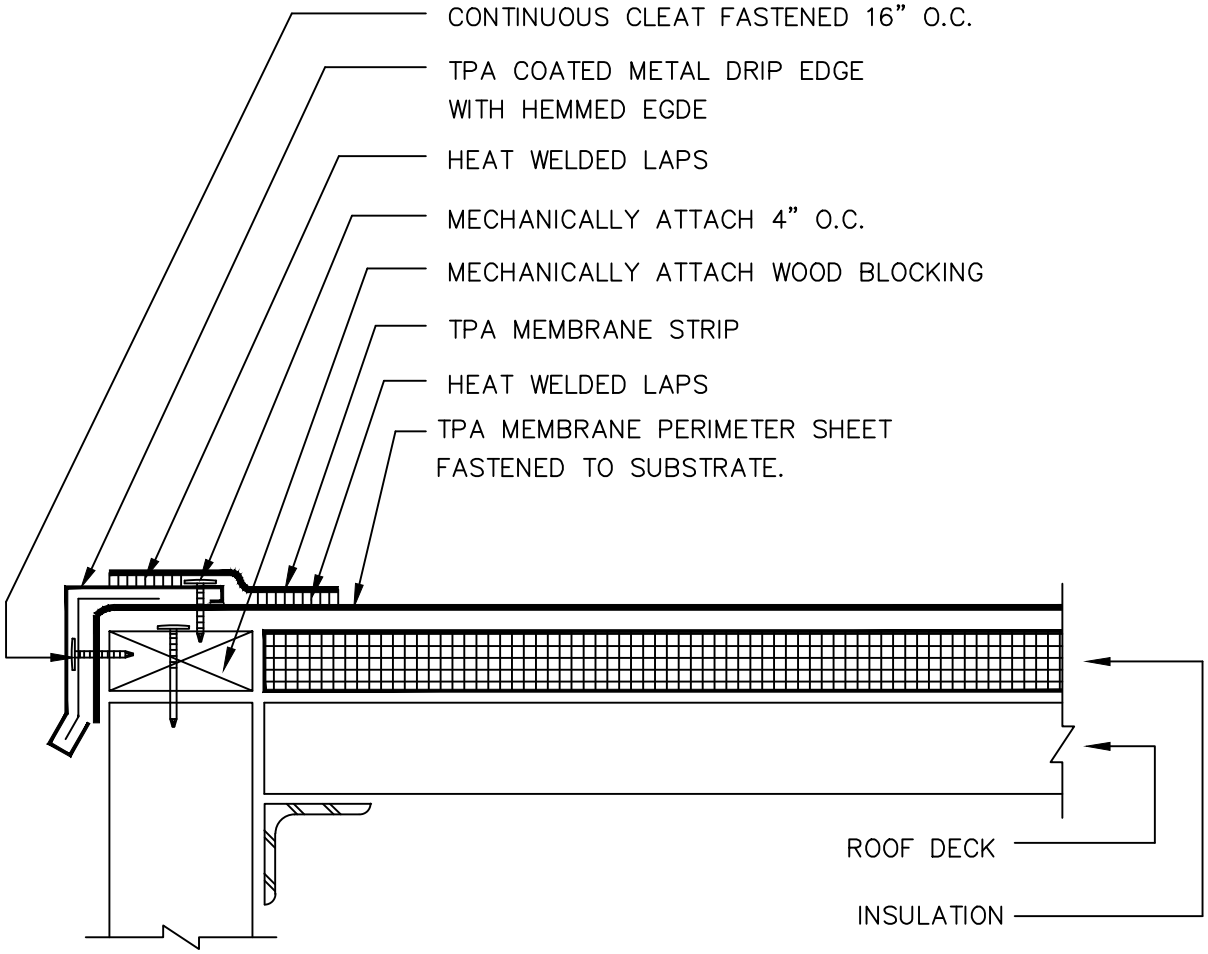

NOTES:

1) MAX. FACE DIMENSION SHOULD BE 5" TO PREVENT DISTORTION FROM "OIL CANNING." IF SURFACE DISTORTION IS ACCEPTABLE, FACE DIMENSION MAY BE INCREASED TO 8".
2) FOR FASCIAS GREATER THAN 8" INSTALL IN TWO SECTIONS.

TREMCO®	SHEET TITLE: TPA COATED METAL ROOF EDGE DETAIL	SCALE: NTS DRAWING No.: TPA–8

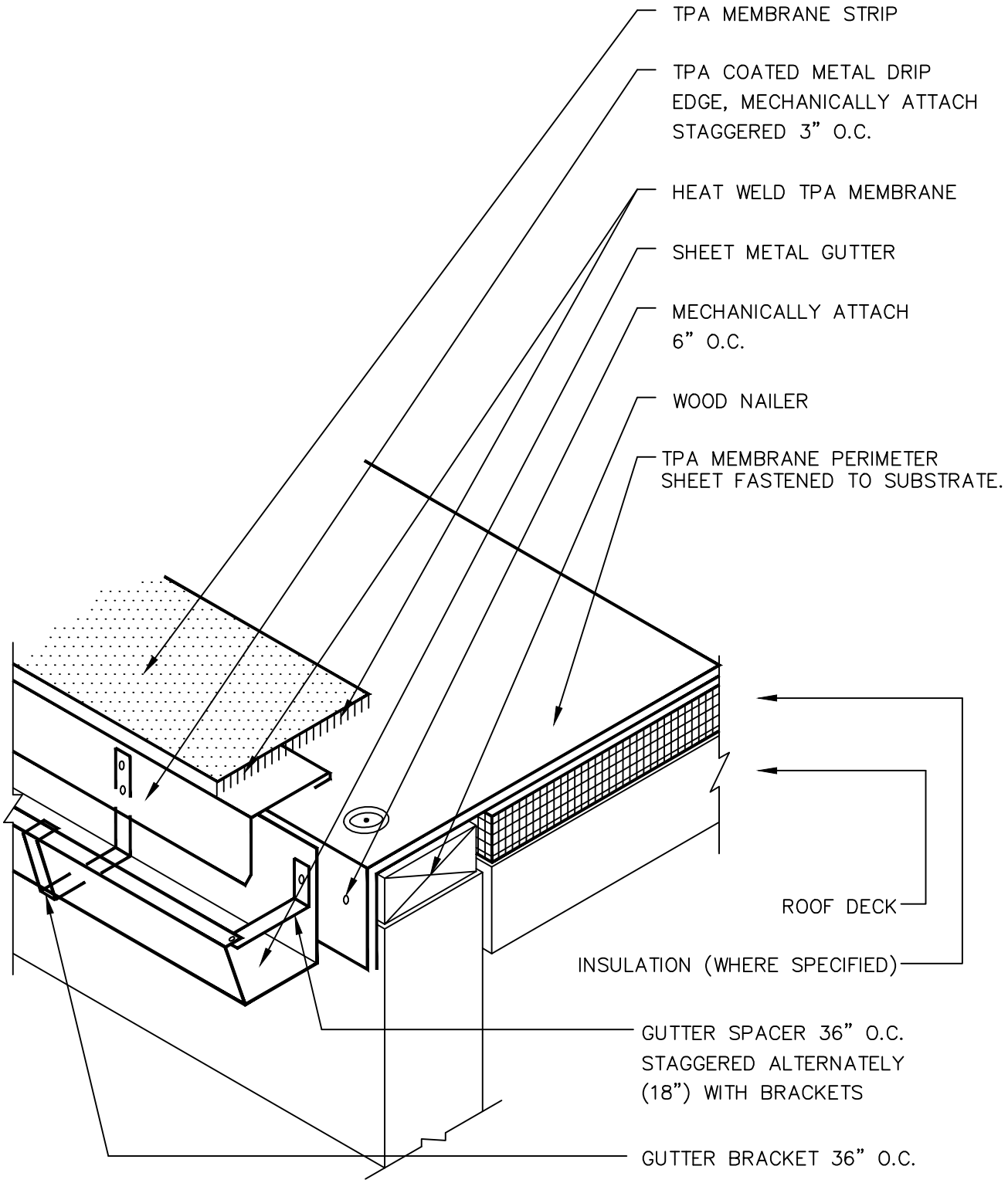

NOTE:
1. ALL METAL SURFACES SHALL BE PRIMED BEFORE CONTACT WITH ANY ADHESIVE OR MASTIC.

TREMCO®	SHEET TITLE: ROOF EDGE WITH GUTTER	SCALE: NTS DRAWING No.: TPA–10

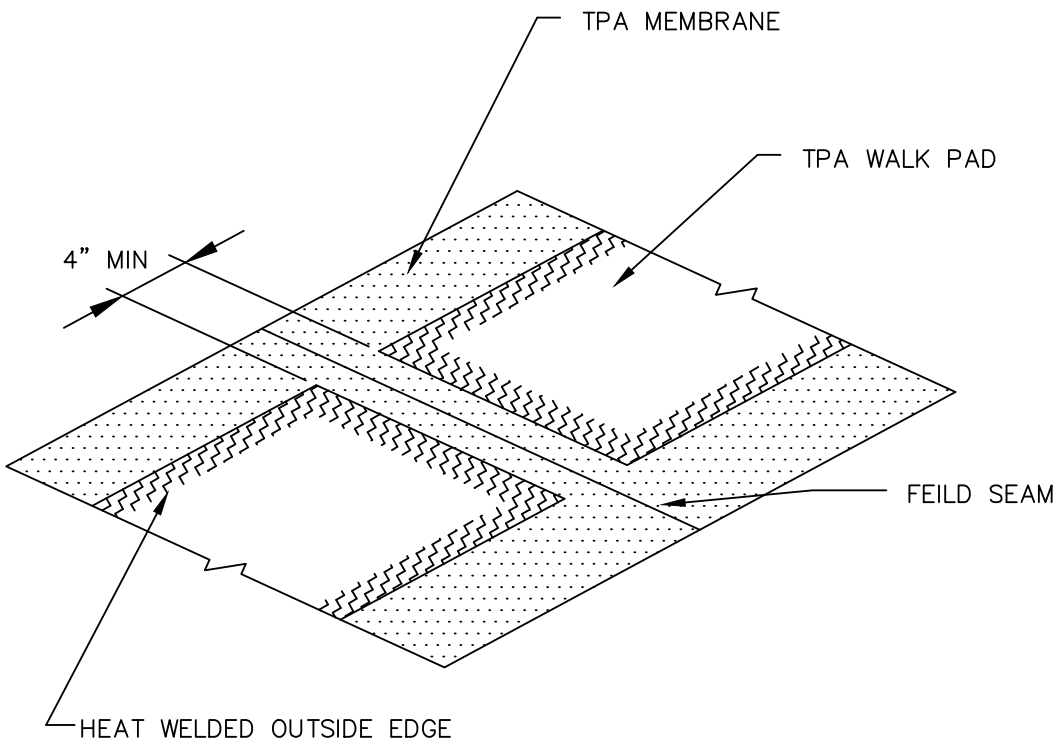

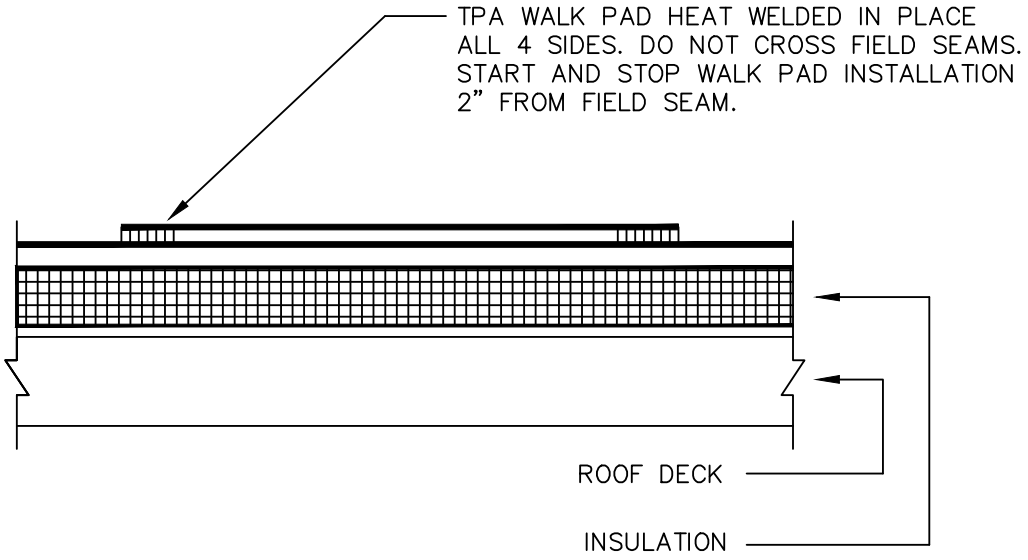

TREMCO®	SHEET TITLE: WALK–PAD INSTALLATION	SCALE: NTS DRAWING No.: TPA–29